NAME: CLASS PERIOD: DATE:



Investigation

# NUTS! - CALCULATING THERMAL EFFICIENCY

## Background Information

Like other foods, nuts are fuels that contain stored chemical energy.

Fuel efficiency—whether the fuel is nuts or natural gas—can be calculated by comparing the amount of energy that goes into a system with the amount of work that comes out.

In comparing efficiencies, the system that converts the energy is as important as the fuel's energy content. Two people can eat the same quantity of nuts, containing the same amount of energy, and experience very different results depending on their metabolism. Similarly, the efficiency of a propane or natural gas vehicle depends on the technology that converts the fuel into useful work.

In this investigation you will measure how much heat energy is absorbed by water from two different nuts (fuels): almonds and macadamias. Then you will have a chance to change the design of the burner and see whether your new technology improved the system's efficiency.

## Problem: *(fill in problem):* _____

_____

## Hypothesis

**If** _____

**Then** _____

## Materials

ring stand
large test tube
test tube clamp
empty soup can
aluminum pie pan
distilled water
can opener
cork bottle cap
1 jumbo paper clip
balance beam
graduated cylinder
thermometer
wire snips
12 macadamias
12 almonds
matches
bottle opener
2 hot pad mittens
test tube stopper with hole for thermometer

NAME: CLASS PERIOD: DATE:

**NUTS!**
**INVESTIGATION CONT.**

# Procedure

1. Unfold the paper clip and cut it into two 5 cm pieces.
2. Insert one end of each clip into the cork.
3. Place the cork in the center of the pie pan.
4. Using the bottle opener, cut vents along the rim of the soup can.
5. Use the can opener to remove the bottom of the can.
6. Peel off the label.
7. Place the test tube stopper halfway up on the thermometer. Gently lay down the stopper with the thermometer.
8. Find the mass of two almonds and record on the data table.
9. Gently place the almonds on the end of the paper clips. Be careful not to break the nuts.
10. Place the soup-can chimney over the cork in the pie pan.
11. Find the mass of the graduated cylinder.
12. Measure 25 ml of distilled water with the graduated cylinder.
13. Find the mass of the graduated cylinder and water.
14. To find the mass of the water, subtract the mass of the graduated cylinder from the mass of the graduated cylinder and water.
15. Record the mass of the water on the data table.
16. Pour the water into the test tube and place the stopper with the thermometer on the test tube.
17. Attach the test tube to the test-tube clamp.
18. Place the test-tube clamp on the ring stand.
19. Record the beginning water temperature on the data table.
20. Lift the chimney and have the teacher light the almonds with a match.
21. Lower the chimney and wait until the nuts have completely burned.
22. Take the ending water temperature and record it on the data table.
23. Using hot pad mittens, remove the test tube from the clamp.
24. Remove the stopper from the test tube.
25. Gently lay down the stopper with the thermometer.
26. Pour the warm water in the test tube into the sink.
27. Remove any unburned nut from the paper clips and discard.

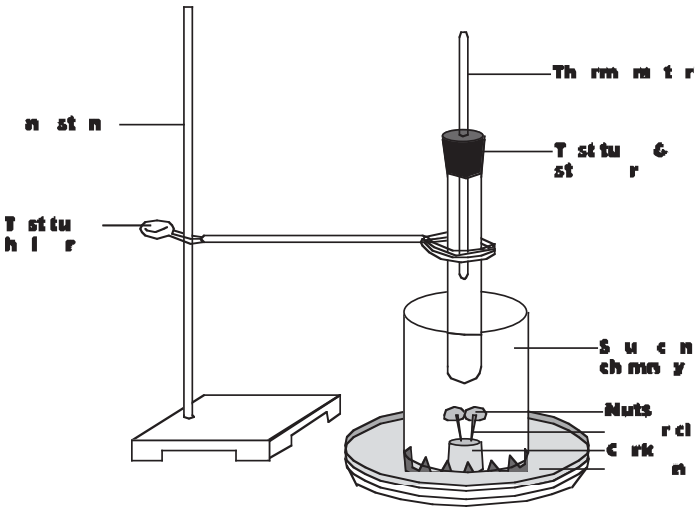

NAME: CLASS PERIOD: DATE:

## NUTS!
## INVESTIGATION CONT.

28. Repeat procedures 6-27 two more times with almonds and a total of three times with macadamias.
25. Design a method to increase or decrease the efficiency of the present system and obtain permission from the teacher to modify the present system.
26. Repeat the experiment with the modified system and record the new data in the second data table.

# Observations

| Type of Nut | Trial | Nuts (g) | Water (g) | Beginning Temp. (°C ) | Ending Temp. (°C ) | Change in Temp. (°C ) |
|---|---|---|---|---|---|---|
| Almond | 1 | | | | | |
| Almond | 2 | | | | | |
| Almond | 3 | | | | | |
| Macadamia | 1 | | | | | |
| Macadamia | 2 | | | | | |
| Macadamia | 3 | | | | | |

Modified Model

| Type of Nut | Trial | Nuts (g) | Water (g) | Beginning Temp. (°C ) | Ending Temp. (°C ) | Change in Temp. (°C ) |
|---|---|---|---|---|---|---|
| Almond | 1 | | | | | |
| Almond | 2 | | | | | |
| Almond | 3 | | | | | |
| Macadamia | 1 | | | | | |
| Macadamia | 2 | | | | | |
| Macadamia | 3 | | | | | |

NAME: CLASS PERIOD: DATE:

# NUTS!
# INVESTIGATION CONT.

1. Using the formula below and the data from the original model, determine the average amount of heat energy absorbed by the water from the almonds (available energy in Calories/gram).

   **Available energy in Calories/gram = $\frac{\text{mass of water x increase in temperature}}{\text{mass of nuts x 1000}}$**

   Show your work in this space.

2. Using the same formula and the data from the original model, determine the average amount of heat energy absorbed by the water from the macadamias (available energy in Calories/gram).

   Show your work in this space.

3. Using the same formula and the data from the modified model, determine the average amount of heat energy absorbed by the water from the almonds (available energy in Calories/gram).

   Show your work in this space.

4. Using the same formula and the data from the modified model, determine the average amount of heat energy absorbed by the water from the macadamias (available energy in Calories/gram).

   Show your work in this space.

NAME: CLASS PERIOD: DATE:

**NUTS!**
**INVESTIGATION CONT.**

# Conclusion

1. When different fuels are used within the same system, the energy available depends on _____.

2. If your modifications to the burner were significant, you should find a difference in the amount of heat energy absorbed by the water. The accepted calorie values are 5.8 Cal/gram for almonds and 7.24 Cal/gram for macadamia nuts. What contributed to the differences between each model and the accepted value? _____

   _____

   _____

   _____

   _____

3. How could you make the burner more efficient? _____

   _____

   _____

# Application

1. To measure the efficiency of a butane burner, start by choosing a task that takes a known amount of energy to accomplish (e.g., raising the temperature of 1lb. of water 1° F takes one British thermal unit (Btu) of energy).

   One pound of water is only 2 cups by volume. For the purposes of this experiment, let's use 10 times that much—10 lbs., or about 5 quarts. How many Btu's are needed to raise the temperature of that much water 1° F? To find out, use the following formula:

   _____ lbs of water x _____ °F = _____ Btu

NAME: CLASS PERIOD: DATE:

# NUTS!
# INVESTIGATION CONT.

2. Because a 1° increase in temperature is small, let's also use a 100° rise in temperature. How does that change the amount of energy required?

   _____ lbs of water x _____ °F = _____ Btu

   The number of Btu's calculated with the formula above represents "useful output" in the formula for calculating efficiency.

3. Pretend that we put the water in a pot on a camp stove and measured the amount of butane used to actually achieve a 100° rise in temperature. A typical amount might be one-sixth of a one-pint butane cartridge. To compare this to our useful output, we need to convert the volume of gas used to Btu. Refer to Figure 3-1-4 for the Btu content per gallon of butane. Remember that there are eight pints in a gallon.

   **If 1 gal butane = _____ Btu**
   **Then 1 pint butane = _____ Btu**
   **And 1/6 pint butane = _____ Btu**

4. The Btu in 1/6 pint of butane is the energy input. Now you have enough information to calculate the efficiency of the burner. Round the result to no more than three significant figures.

   $$\frac{\text{Useful output (Btu)}}{\text{Energy input (Btu)}} = \text{efficiency rating} \times 100 = \text{percentage efficiency rating}$$

   **_____ = _____ x 100 = _____% efficiency**

5. What percentage of the energy put into this system—the butane burned—was lost during heating of the water? Figure this by subtracting the efficiency percentage calculated above from 100.

   **100% - _____ efficiency = _____%**

   This is the "waste" percentage.

## NUTS!
## INVESTIGATION CONT.

6. Where did the energy go? We know that it did not just disappear. The heat from the flame was not only collected by the water. Some of it dissipated into the air. Name at least three other ways the energy was lost to the system.

   a. _____

   b. _____

   c. _____

7. What could be done to capture this heat? Come up with at least three modifications that would make the system more efficient.

   a. _____

   b. _____

   c. _____

# Going further

1. Pretend that you are considering cooking a steak in your electric oven. The energy used to cook your steak could possibly come from a coal-burning power plant. Before your steak can absorb any energy (cook), the energy has to be converted to electricity. The power plant will first convert chemical energy stored within a fuel (coal) to thermal energy (heat), then convert the thermal energy into kinetic energy (turning the turbine in a generator), then convert that kinetic energy into electricity (electrical energy).

   Contrast the efficiency between using electrical energy converted from fossil fuels to cooking your steak outside using a propane grill.

   _____

   _____

   _____